TEFCOLD®
COOL PRODUCTS WORLDWIDE

71824 / Galaxy+ GPL26FGD Anthracite / UK

Position	ItemNo	Description
01	72053	Panoramic end wall right d:740mm h:1500mm A
	72054	Panoramic end wall left d:740mm h:1500mm A
02	49283	Panoramic end wall glass h:1500 mm
03	72057	Blok end wall left d:740mm h:1500 mm A
	72075	Blok end wall right d:740mm h:1500 mm A
04	72055	Block end wall with mirror right d:740 h:1500
	72056	Block end wall with mirror left d:740 h:1500
05	42199	LED Tube T8 L=1200mm 20W
	44855	Canopy T8 led tube 1200 mm OSRAM red color
07	67822	Cable for Undershelf Lighting w:938 / w:1250
09	42339	Shelf LED Bar 4000K 1250mm
	42340	Shelf LED Bar Red 1250mm
10	42137	Air Diffuser
101	44976	2500 module evaporator(SINGLE)
102	45252	Evap Fan
103	67816	Compressor Embraco EMC 3145 U
104	42233	Condenser Fan Motor Reversible
105	67818	Micro channel condenser EU18
106	71567	Dryer
107	44978	Electrical connection box
108	71576	Condensate water tray for w:2500
109	71577	Sponge for w:2500
11	72077	Top back panel 1250mm h: 1500 A
110	42260	Digital Controller XR20CH
	44939	Digital controller XR70CH
	67823	Digital controller XR60CH
	67824	Digital controller monitoring card for Dixell
111	44940	On-off switch
112	42271	Light Switch
113	67828	Capillary Ø1.4 - 125 cm
114	42231	Probe Dixell NTC 3MT
	42232	Probe Dixell NTC 6MT
115	53050	Electrical Box
116	53051	Electrical Box Cover
117	53052	EMC Filter
118	53053	Relay
12	72079	Bottom back panel 1250 mm Grey
13	72081	Base deck for d:740 w:1250 mm module A
14	72083	Base deck price tag holder W1250 A
15	68909	Price tag for base W1250
16	72090	Shelf 250mm d:740 w:1250 A
	72091	Shelf 300mm d:740 w:1250 A
	72092	Shelf 350mm d:740 w:1250 A
	72093	Shelf 400mm d:740 w:1250 A
	72094	Shelf 450mm d:740 w:1250 A
	72095	Shelf 500mm d:740 w:1250 A
17	72096	Shelf bracket 250mm A
	72097	Shelf bracket 300mm A
	72098	Shelf bracket 350mm A
	72099	Shelf bracket 400mm A
	72100	Shelf bracket 450mm A
	72101	Shelf bracket 500mm A
18	67830	Perspex Riser 2 x 1250 mm
19	48230	Shelf Price Tag Holder L=1250
20	72103	Shelf support L: 1250mm
21	72105	Air return grill 1250 mm A
22	72107	Air Return Grill Support W1250
23	42153	Adjustable Feet

TEFCOLD®
COOL PRODUCTS WORLDWIDE

71824 / Galaxy+ GPL26FGD Anthracite / UK

24	41955	SS Bumper 2500mm
	69194	SS Bumper Support Clips
25	49374	Front panel trim for SS bumper W2500 SS
	72111	Front panel trim for SS bumper W2500 A
26	72115	Front panel W2500 A
27	44914	Plexi glass cover for Bottom grill
28	71563	Vertical door LED 4000K for h:1500
	71564	Vertical door LED Red for h:1500
29	45366	Door Handle Grey
30	71574	Hinged door with transparent spacer R W1250
	71575	Hinged door with transparent spacer L W1250
33	67840	Door Top Hinge Right
	67841	Door Top Hinge Left
34	72119	Canopy Trim 2500mm A
35	67854	Vertical Door Gasket h: 1500
36	67857	Horizontal Door Gasket w: 1250
37	67861	Top and Bottom Body Gasket w: 2500
38	72123	Fan Cover Sheet w: 2500 A
39	53037	Drain Pipe Clamp
40	53038	Drain Plastic
41	53039	Plastic Drain Fixing Nut
42	53040	Spiral Pipe
43	47351	Transformer
44	69191	LED Holder Set for Single LED

2026-02-12

TEFCOLD
COOL PRODUCTS WORLDWIDE

71824 / Galaxy+ GPL26FGD Anthracite / UK
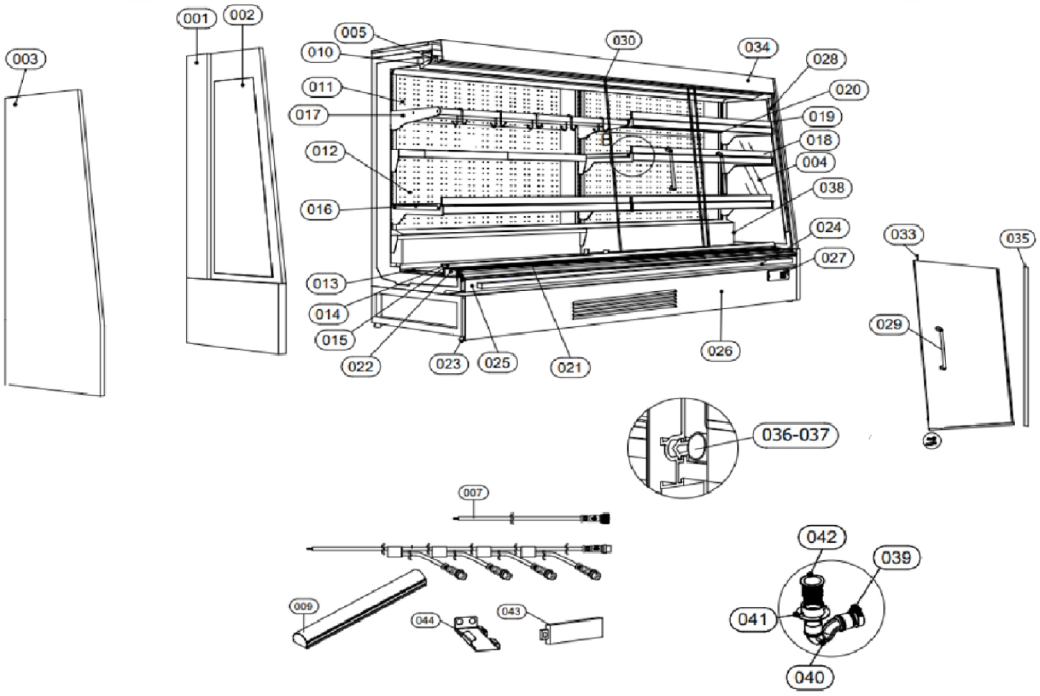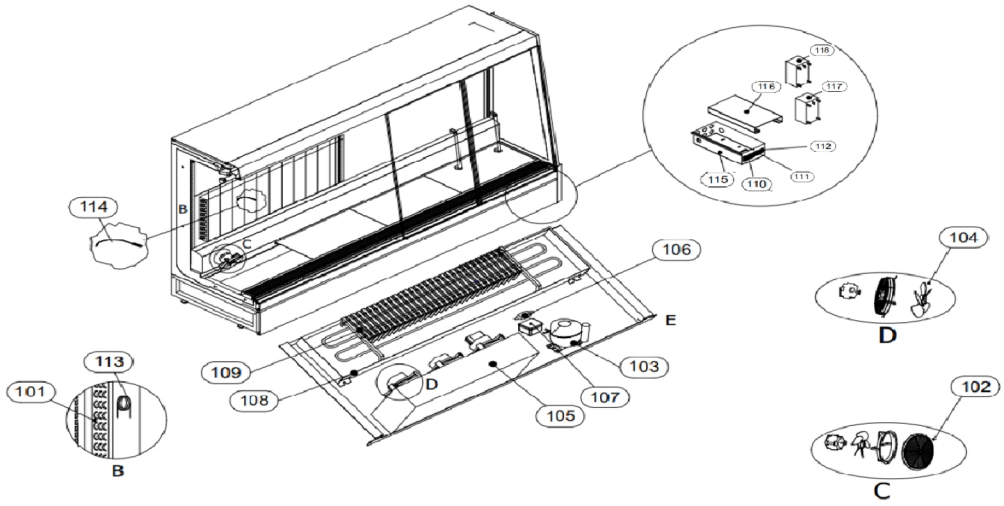
TEFCOLD